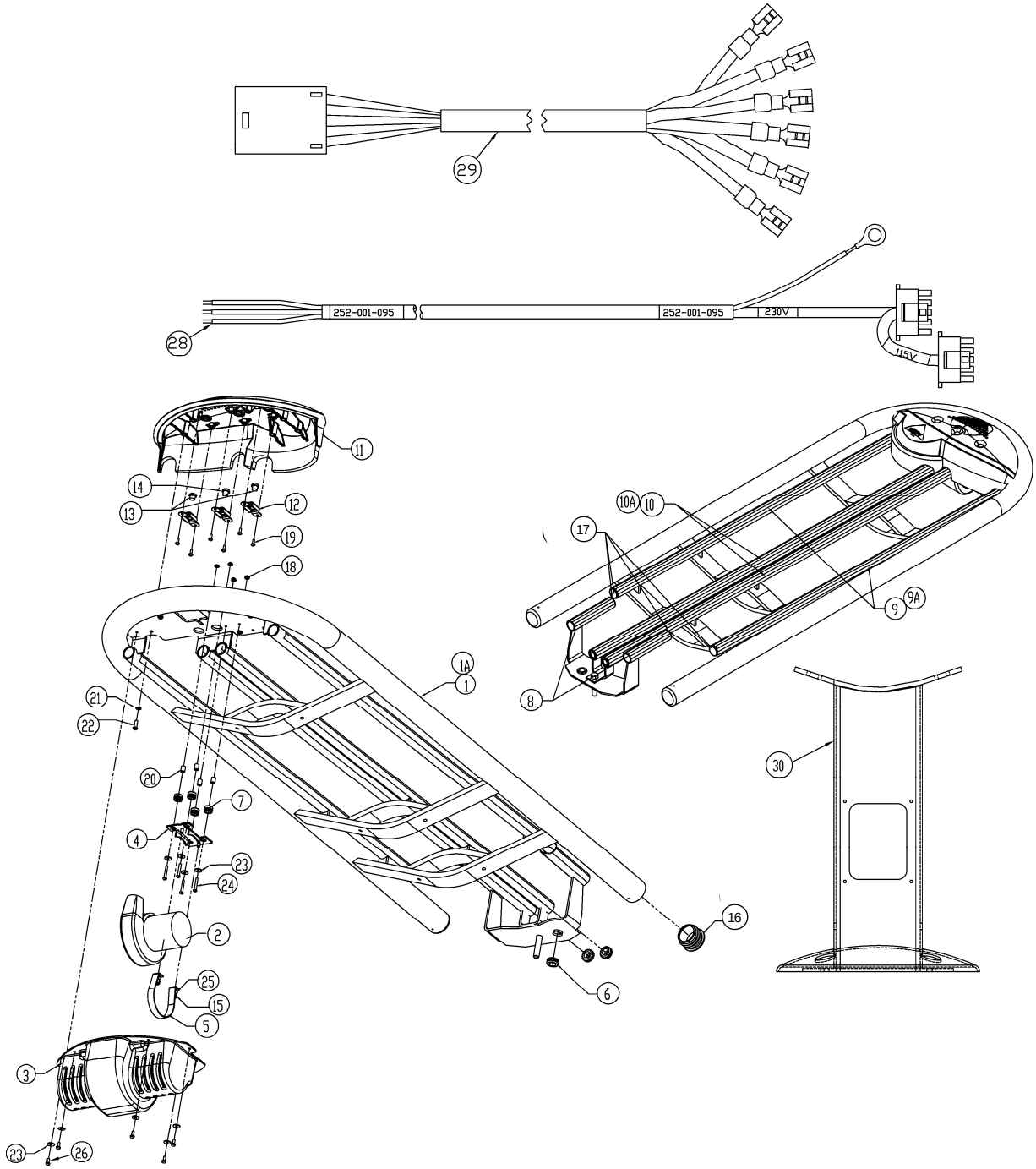

Options Ball Rack Assembly
259-001-049 – 11 Ball Rack Assembly
252-002-135 – 15 Ball Rack Assembly
259-001-028 – Leg Assembly

259-001-049 – 11-Ball Rack Assembly

	Part No.	Description	Qty
1	259-001-000	Upper Rack Weldment (11 Ball)	1
2	252-001-066	Blower Fan Assembly	1
3	252-001-027	Blower Cover	1
4	252-001-088	Blower Bracket	1
5	252-001-089	Blower Strap	1
6	711-520-017	Grommet	3
7	711-564-728	Grommet	4
8	252-001-125	Cover Guide Tube Glow Strip	2
9	252-001-155	Inner Rail Cover W/Stripes	2
10	252-001-154	Center Rail Cover, Glow Stripes	2
11	252-001-086	Upper Ball Housing	1
12	252-001-090	Button Bracket	3
13	252-001-097	Blue Push Buton	2
14	252-001-096	Black Push Button	1
15	839-249-007	Nut, Hex Heavy 1/4-20 w/Nylon Insert	2
16	259-001-035	End Cap, 2.25 DIA (Flat)	2
17	259-001-036	End Cap, 1.25 DIA (Flat)	4
18	838-740-002	Nut, Hex Locknut, #10-32	4
19	818-233-082	Screw, #8-32 x .500, Phillips, Pan Head, Sems	6
20	722-564-720	Spacer, 3/8 x 1/2 x #10 Nylon	4
21	951-148-002	Lock washer, 1/4 split	6
22	808-549-120	Screw, Hex 1/4-20x3/4	6
23	941-137-102	Flat washer, 3/8 x 5/8 x 1/16	9
24	814-638-207	Screw, #10-32 x 1-1/4 Slot Head, M/S, Zinc	4
25	948-746-810	Flat washer, 1/4	2
26	818-740-082	Screw, #10-32 x 1/2 Hex Washer	5
27	822-626-081	Screw: #6 x1/2 Phillips, Pan Head (Not Shown)	2
28	252-001-095	Blower Cable	1
29	252-001-091	Cable, Ball Tray Tenth Frame Switch	1

Now 844049002 Stove Nut

Leg Assembly

	Part No.	Description	Qty
30	259-001-028	Leg Assembly	1

252-002-135 – 15 Ball Rack

	Part No.	Description	Qty
1A	252-001-009	Upper Rack Assembly, (15 ball)	1
9A	252-001-122	Inner Rail Cover w/Glow Stripes (15-ball)	2
10A	252-001-121	Center Rail Cover w/Glow Stripes (15-ball)	2